Storage Basics

What Is Storage?

- Storage in a narrow sense

CDs, DVDs, Zip drives, tapes, hard drives...

Storage is the process of storing data on certain medium in a proper, secure, and effective way based on application environments. The stored data is then accessible.

- Storage entities must be securely stored on media.
- The stored entities must be accessible.
- Storage management is available.

- Storage in a broad sense

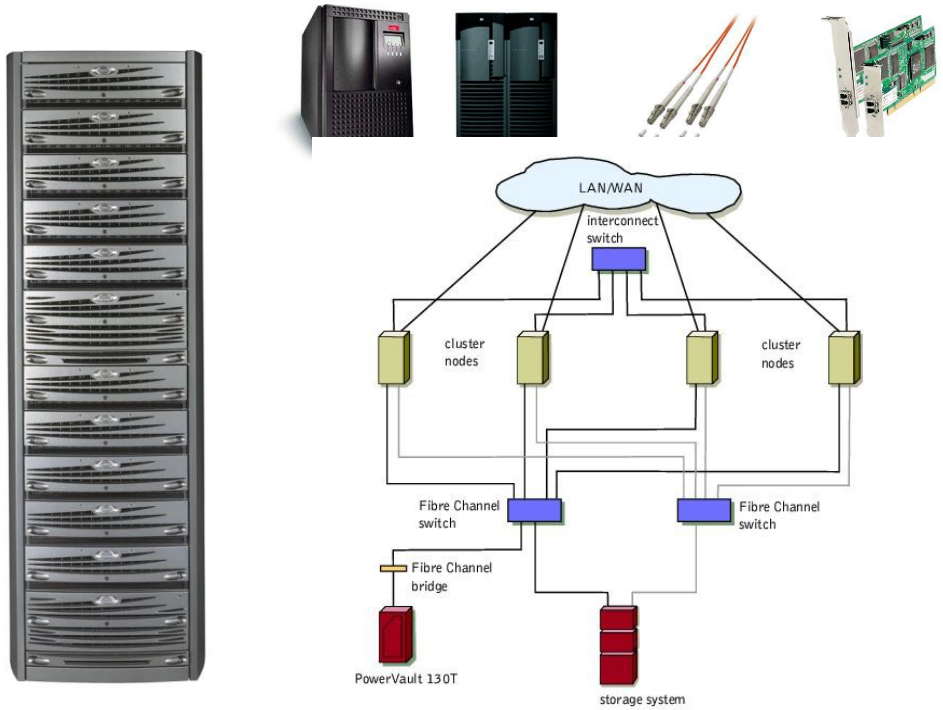

- Storage hardware (disk arrays, controllers, disk enclosures, tape libraries...)
- Storage software (value-added software for backup, management, snapshots, replication, and others)
- Storage networks (HBAs, FC switches, FC/SAS cables...)
- Storage solutions (centralized storage, archives, backups, disaster recovery...)

Storage in an IT System

Storage is the carrier of data in IT systems and is the core asset of an enterprise.

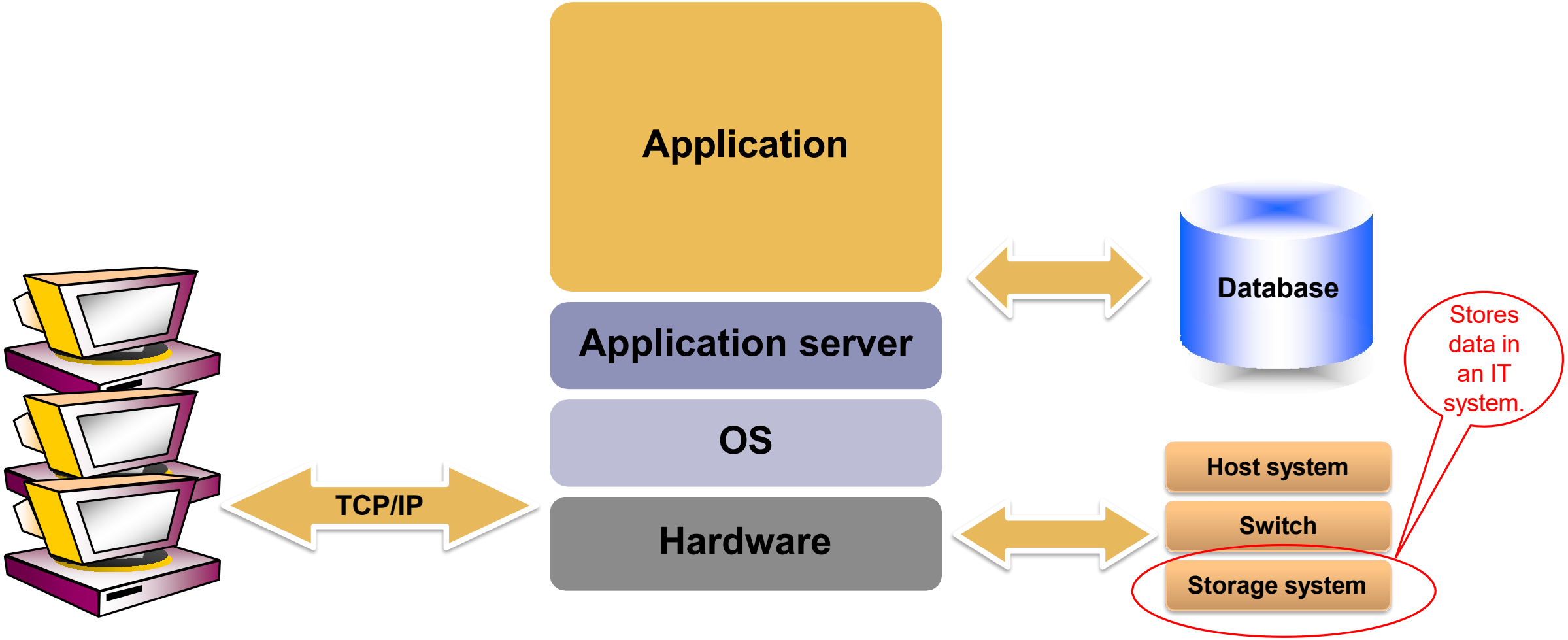

HUAWEI

Storage Overview: Application I/O Path

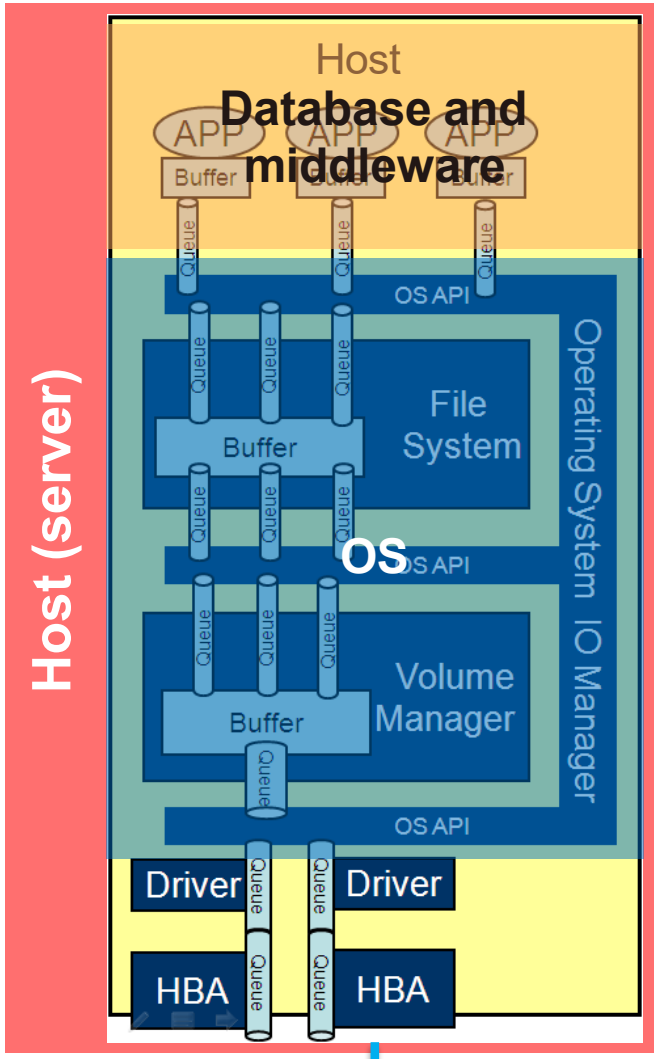

A read or write operation of an **application** goes through **the database, OS, host HBA, and switch to reach the storage device**. After being processed on the storage device, data is stored on the hard drive.

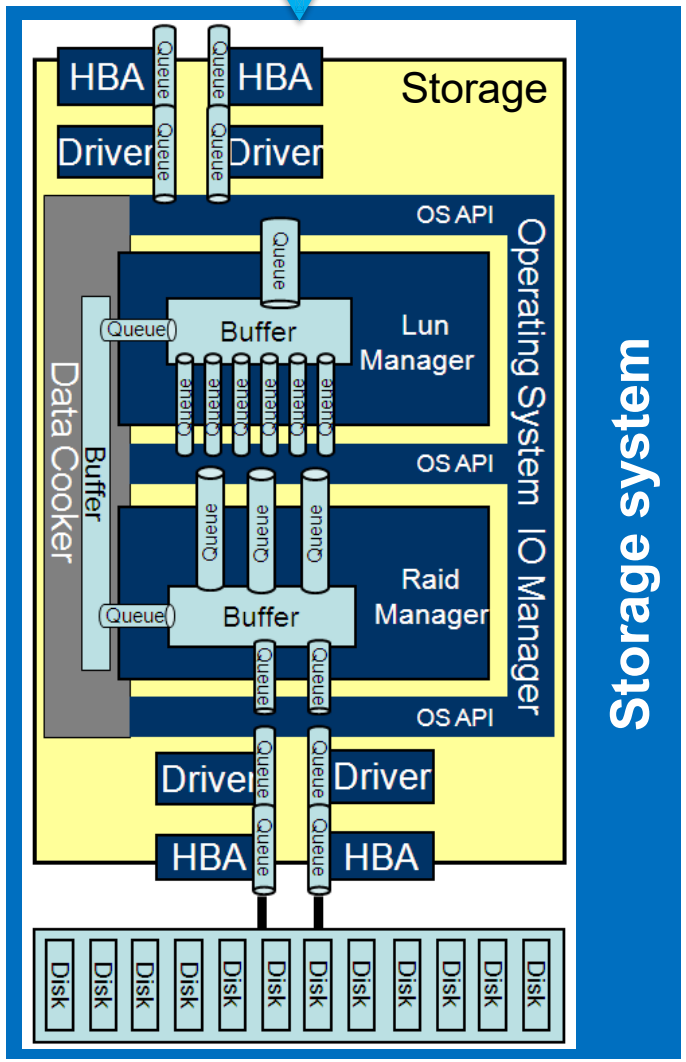

Switch

I/O path: application -> middleware -> database -> OS -> host HBA -> switch -> storage system

HUAWEI

Storage Development: From Server Attached Storage to Independent Storage

1. Drive inside server

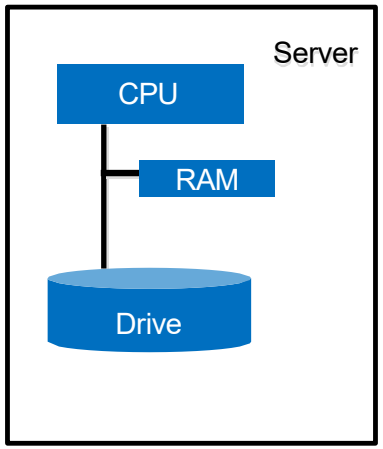

2. External disk array (DAS)

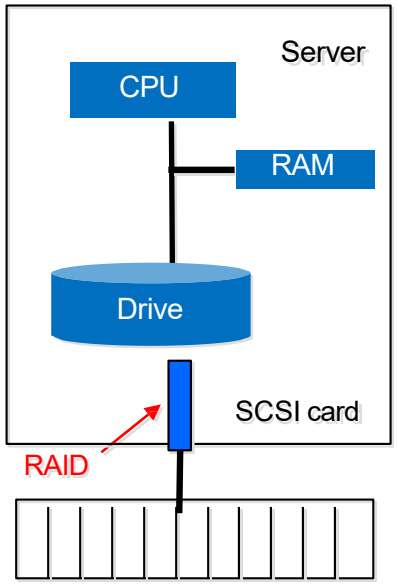

Just a Bunch of Disks (JBOD)

3. Intelligent disk array (DAS)

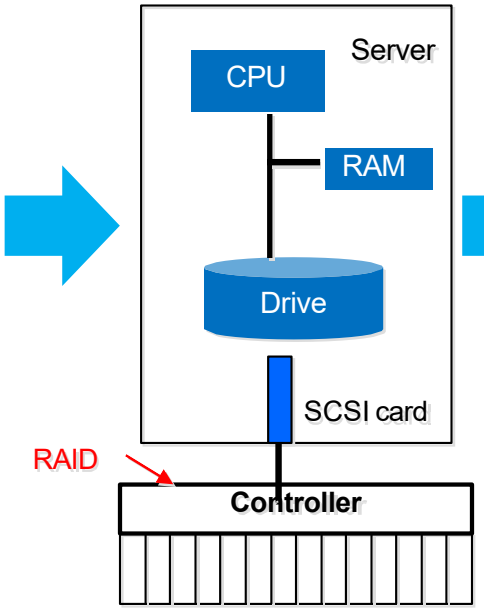

4. Independent storage system

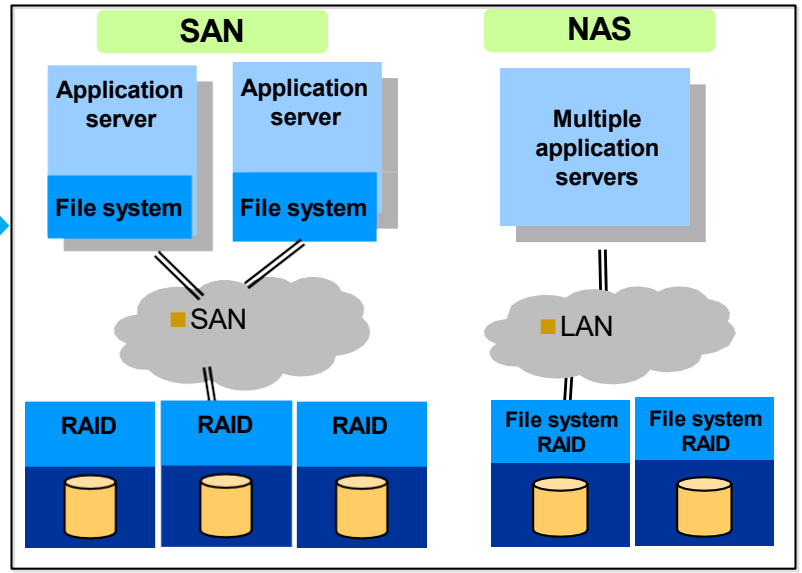

Limitations	How it works	How it works	Problems resolved
• System performance bottleneck caused by disks • Small capacity due to limited disk slots • Poor reliability due to data storage on a single disk • Low storage space utilization • Scattered data storage in local systems	JBOD logically connects several physical disks to increase capacity. It does not provide data protection.	A controller provides RAID and large-capacity cache, enables the disk array to have multiple functions, and is equipped with dedicated management software.	• System performance bottleneck caused by disks • Small capacity due to limited disk slots • Poor reliability due to data storage on a single disk • Low storage space utilization • Scattered data storage in local systems
	Problems resolved • Small capacity due to limited disk slots • Poor reliability due to data storage on a single disk	**Problems resolved** • System performance bottleneck caused by disks • Small capacity due to limited disk slots • Poor reliability due to data storage on a single disk	

The evolution from DAS to SAN makes shared storage for multiple hosts possible.

www.huaweicloud.com

HUAWEI

Storage Overview: Working Principles of File Storage and Object Storage (by Storage Device)

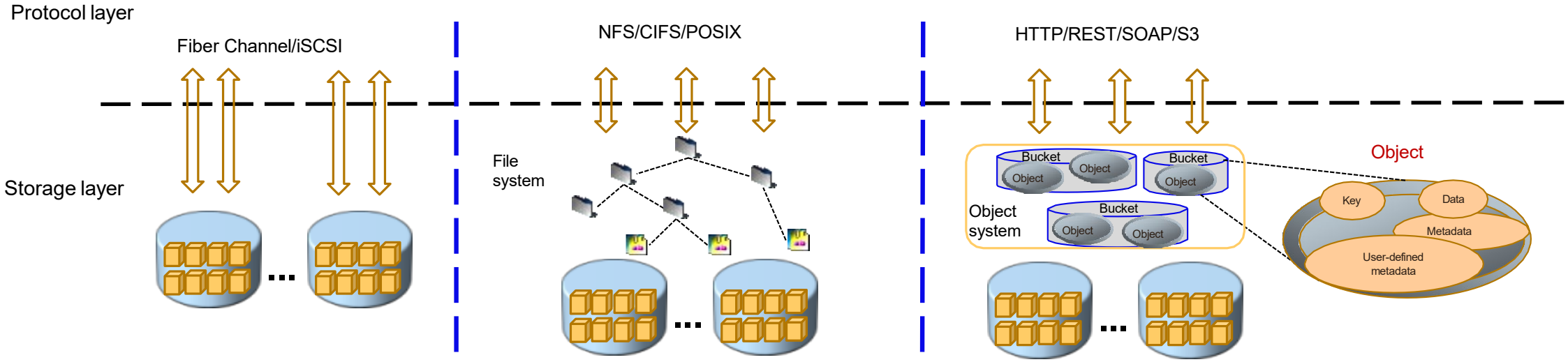

- Direct access, minimum resource consumption, and maximum efficiency
- **No data semantics, raw device access**
- Scenarios: low latency and little sharing (permission management not involved), for example, Oracle

iSCSI/FC SAN

- Sharing of files and folders **in a tree structure**. The more files, the more directory levels.
- File access
- Scenarios: wide sharing of file-based services

NAS

- **Isolated data storage on user-managed systems with flat structures**
- Users can create buckets (working like root directories) and then upload objects to or download objects from the created buckets, and share the uploaded objects using links.
- Scenarios: storage for Internet services, and data archive or backup

Object

HUAWEI

Storage Networking: DAS, SAN, and NAS

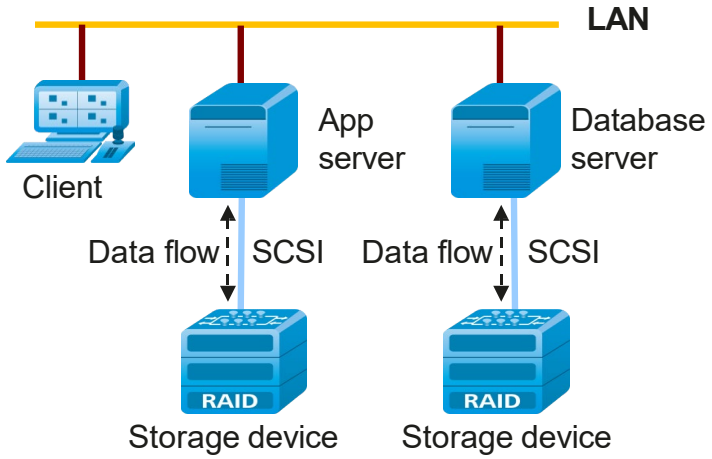

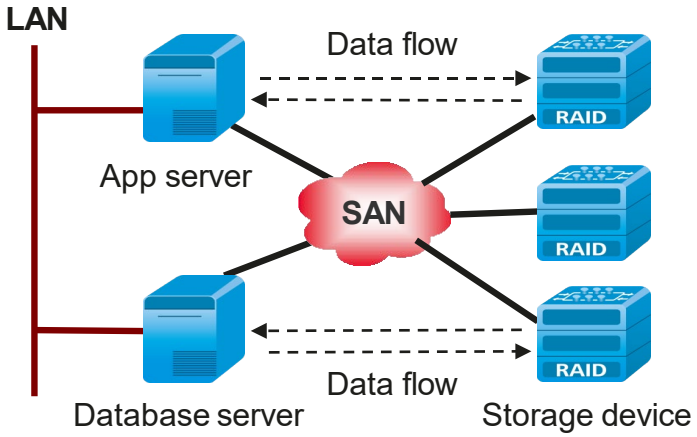

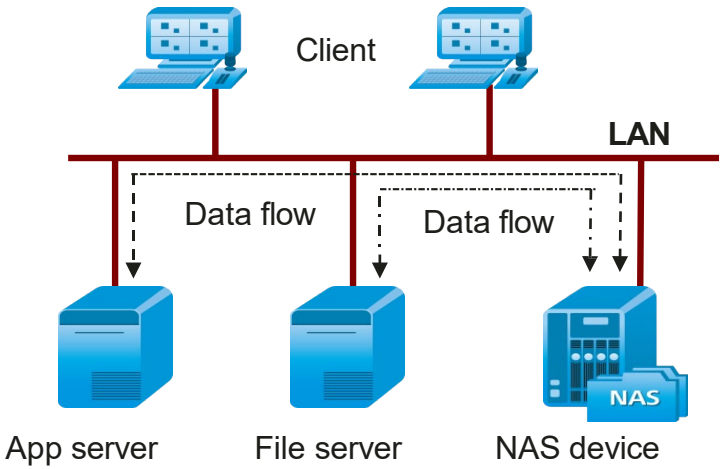

Direct-Attached Storage (DAS)

- A storage device is directly connected to a host.
- Decentralized data management
- Low storage space utilization, poor scalability
- One server has only one storage device connected. Multiple servers need to rely on the sharing capability (like folder sharing) of an OS to share the same storage device.

Storage Area Network (SAN)

- Data can be transferred between hosts and storage systems at a high speed.
- Hosts and storage devices can be expanded independently.
- High storage space utilization

Network-Attached Storage (NAS)

- Storage devices are connected to networks to provide data and file services.
- Support for file sharing protocols: CIFS and NFS

Storage Networking: Summary

Item	DAS	NAS	SAN	
			FC SAN	IP SAN
Transport type	SCSI, FC, or SAS	IP	FC	IP
Data type	Blocks	Files	Blocks	Blocks
Scenarios	All	File servers	Database applications	Virtualization
Advantages	Easy to understand Robust compatibility	Easy to install Low cost	High scalability, high performance High availability	High scalability Low cost
Disadvantages	Hard to manage, limited scalability Low storage space utilization	Poor performance Inapplicable to some applications	High cost, complex configuration Interoperability issues	Poor performance

SAN is used for the **transmission of massive amounts of data blocks**, whereas NAS provides **file-level data access and sharing**. SAN and NAS can work together to offer access to different types of data. More and more data centers are using SAN and NAS together to enable data aggregation, high-performance access, and file sharing.

Storage Media: Structure, Volume, Rotational Speed, and Cache of HDDs

HDDs have mechanical and electronic components, including:

- Magnetic head: It reads and writes data.
- Actuator: It drives the arm to move the magnetic head over the surface of the platter.
- Platter group: It holds the data written to the disk.
- Spindle motor: It enables platters to keep rotating at a high speed.
- Control circuit: It implements system control, speed adjustment, and drive functions.

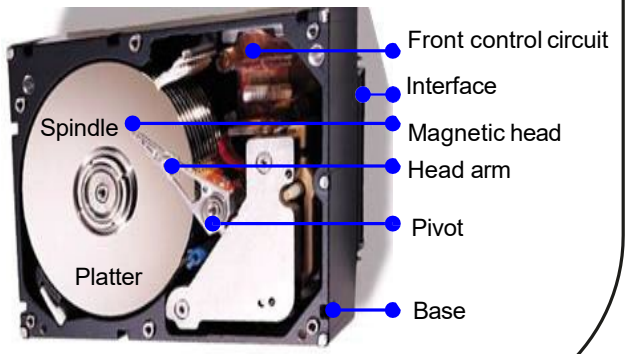

Volume
Disk volumes are measured in MB or GB. Capacity of a single platter and the number of platters are what determines the volume of a disk.

Rotational speed
It specifies the number of rotations made by disk platters per minute. The unit is rotation per minute (rpm). In most cases, the rotational speed of a hard disk reaches up to 5,400 rpm or 7,200 rpm. Some SCSI hard disks use the liquid metal bearing, making a rotational speed of up to 10,000 rpm to 15,000 rpm.

Cache
There is a huge speed gap between a CPU and a disk. To narrow this gap, disks are configured with high-speed caching. The disk cache has the same function as the high-speed cache on the CPU. Both of them aims to speed up the hard disk's read and write. The larger the cache, the better.

Storage Media: SSDs VS. HDDs

SSD hardware structure

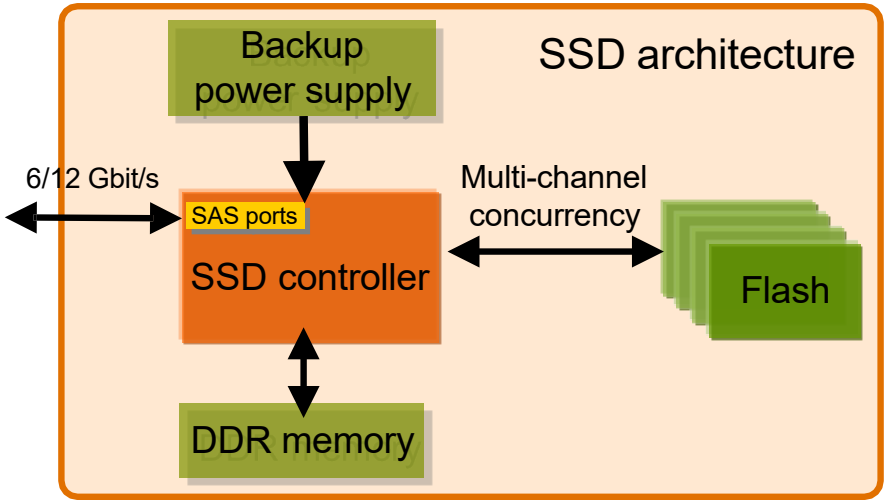

- No high-speed rotational components, high performance, and low power consumption
- Multiple concurrent channels, allowing time-division multiplexing for flash granules in a channel
- TCQ and NCQ supported to respond to multiple I/O requests at a time
- Typical response time of less than 0.1 ms

Item	SSD	HDD
Price	High	**Low**
Performance	**Fast**	Slow
Data writes	SLC: 100,000/MLC: 10,000	**Unlimited**
Operating noise	**No**	Yes
Operating temperature	**Extremely low**	Normal
Shock resistance	**Good**	Poor

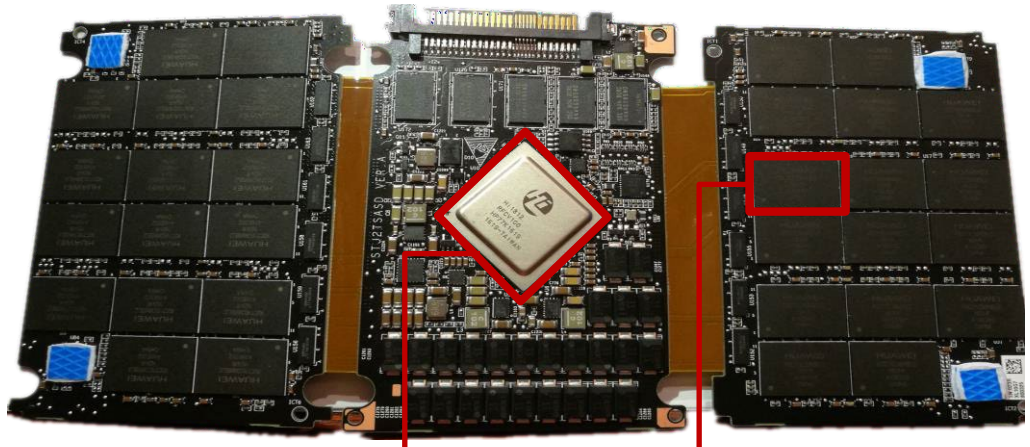

SSD controller chip

Flash granule

HUAWEI

Object Storage Service

Object Storage Service
(OBS)

- Fully managed object storage
- Support for **access over the Internet (HTTPS)**
- Reliability of **99.9999999999% (12 nine)**
- Event triggering capabilities
- Cost-effective solutions

HUAWEI

OBS Bucket

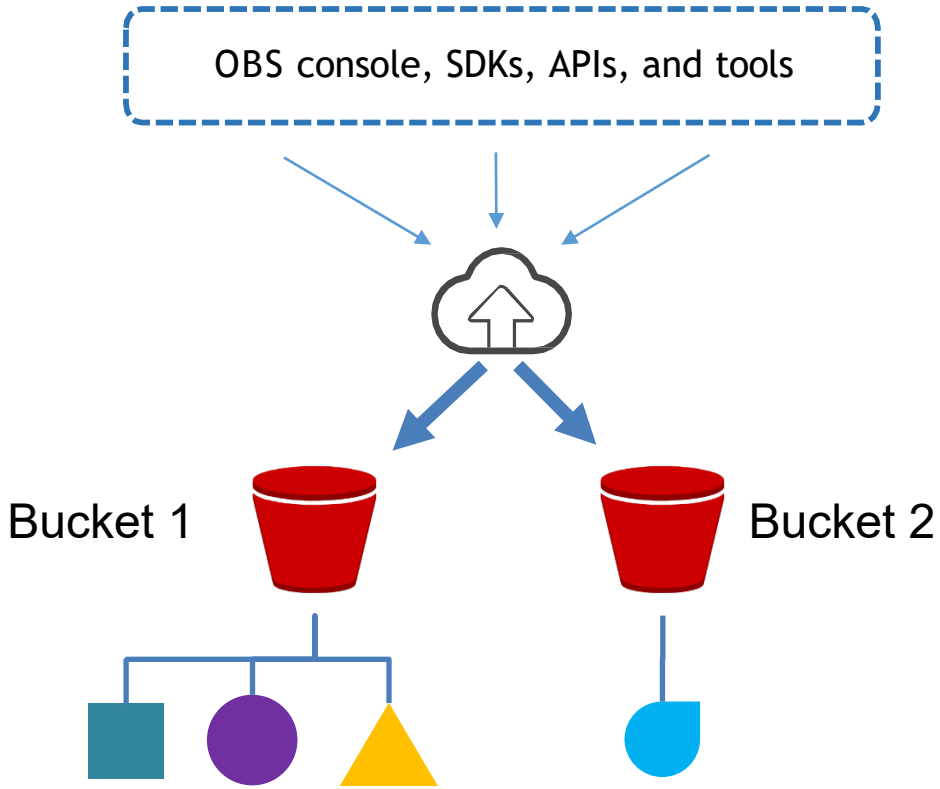

- To store objects in OBS, create a bucket first.
  - A bucket is a management unit of OBS.
- Any amount of data can be stored in OBS.
  - Objects can be thought of like files.
  - An object is uniquely identified by an object name
- Use cases
  - Data storage and backup
  - Data distribution source
  - Static website hosting
  - Core storage for data lakes and data analysis

HUAWEI

Object URL

Adding an object name to the access path of the bucket that stores this object uniquely identifies the object.

Each object has an access path (URL) that is accessible to the public.

Bucket name Region Object name

http://bucket.obs.ap-southeast-2.myhuaweicloud.com/mykey/file.txt

HUAWEI

OBS Billing

- Decoupled storage and compute reduces storage costs.
- There is no minimum fee. No preset space is required and you **only need to pay for what you use**.
- Billable items include **storage**, **traffic**, and **API calls**.
  - Inbound traffic and the traffic transferred out to the same region are free.
  - There are discounts on traffic from OBS to CDN.
  - Unnecessary function calls result in waste.

HUAWEI

OBS Storage Class

Lifecycle Management (from Hot to Cold)

Standard storage → Infrequent access storage → Archive Storage → Delete

Standard storage

- Highest unit price
- Freest access

Infrequent access storage

- Relatively low unit price
- More expensive for more requests

Archive Storage

- Lowest unit price of the three storage Classes
- Restore required before access

HUAWEI

Reliability and Availability of OBS

Reliability of 99.9999999999%, availability of 99.995%

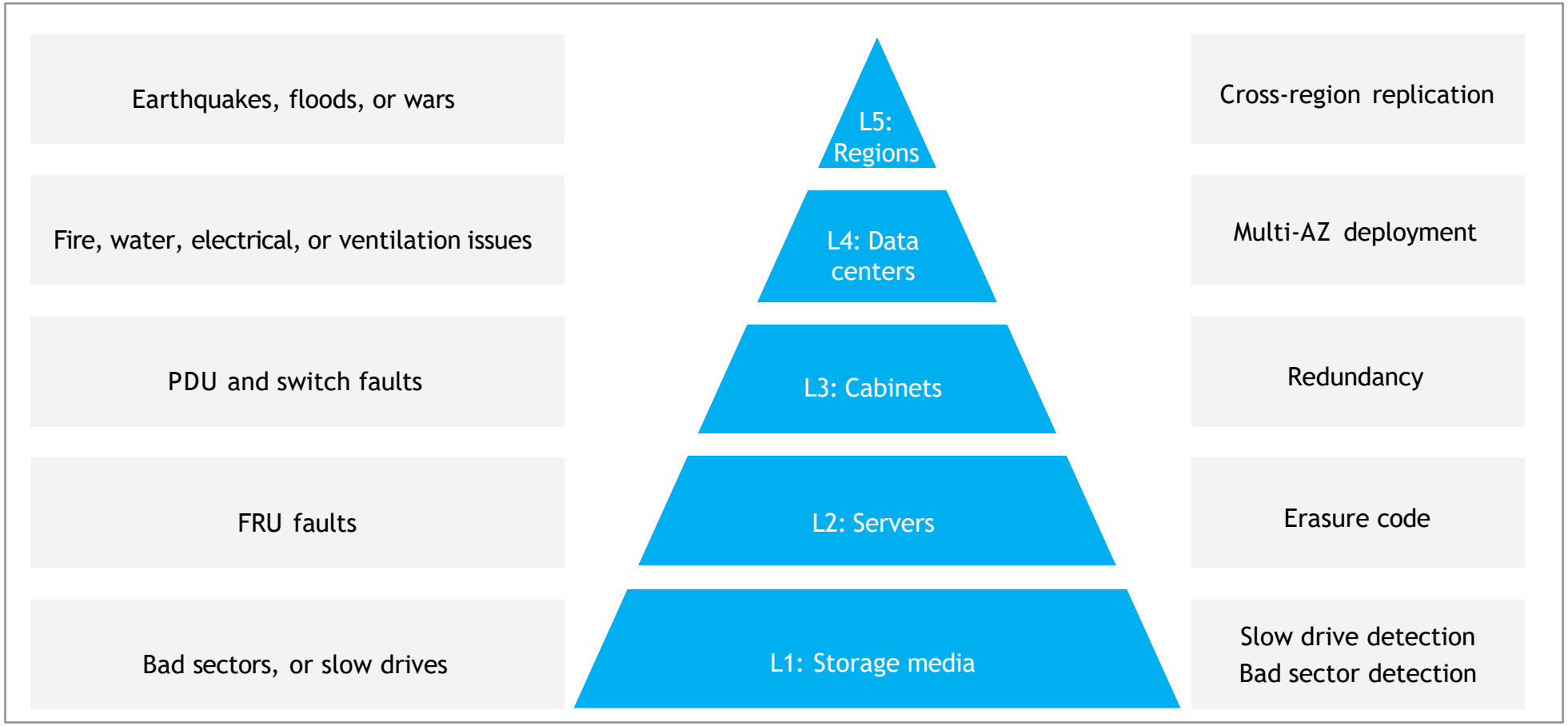

EVS Features

Elastic Volume Storage (EVS)

- A block storage service that provides disks to ECSs
- To guarantee data reliability, **three-copy redundancy in a single AZ**
- **99.9999999% durability and availability (9 nine)**
- a single disk supports **up to 32 TB**
- A variety of specifications, balancing both costs and performance
- Storage of the **backup data to OBS**

HUAWEI

EVS Disk Type Selection

IOPS — Number of read/write operations performed by an EVS disk per second

Throughput — Amount of data read from and written into an EVS disk per second

Latency — Duration from the time when a read/write request is sent to the time when the request is complete

Parameter	Extreme SSD	Ultra-high I/O	General Purpose SSD	High I/O
Description	Superfast disks for workloads demanding ultra-high bandwidth and ultra-low latency	High performance disks excellent for enterprise mission-critical services as well as workloads demanding high throughput and low latency	Cost-effective disks designed for enterprise applications with medium performance requirements	Disks suitable for commonly accessed workloads
Max. IOPS	128,000	50,000	20,000	5,000
Max. throughput	1,000 MB/s	350 MB/s	250 MB/s	150 MB/s
Latency	200 μs	1 ms	1 ms	1-3 ms
Cost	$$$$	$$$	$$	$
Typical use cases	Super-high IOPS and super-low latency, suitable for heavy-loaded databases and HPC file sharing	IOPS-optimized disks, suitable for I/O-intensive applications, high-performance system disks, and core file sharing	Cost-effective and highest throughput ratio, suitable for most workloads	Entry-level performance. With the burst performance, it can be used for workloads with unstable pressure, like boot disks.

ECS Local Disk Highlights

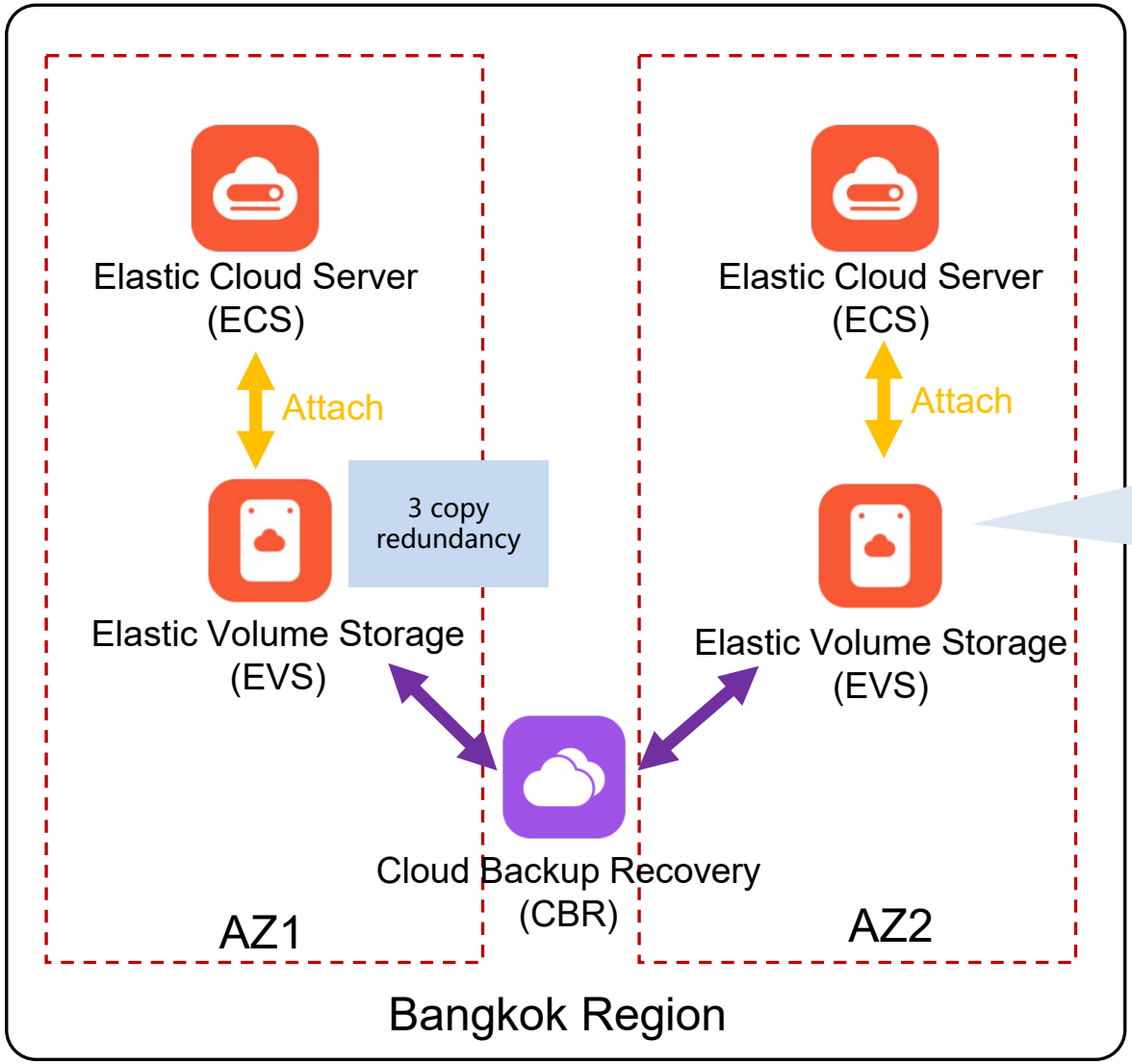

EVS

- **Stable** and **durable** high-speed disks Local disks
- **Super-low latency** for local accesses
- Can be **system disk** and **data disk**

HUAWEI

SFS

Scalable File Service (SFS) provides reliable, high-performance shared file storage hosted on Huawei Cloud. With SFS, you can enjoy shared file access spanning multiple ECSs, Bare Metal Servers (BMSs), and containers created on Container Cloud Engine (CCE) and Cloud Container Instance (CCI).

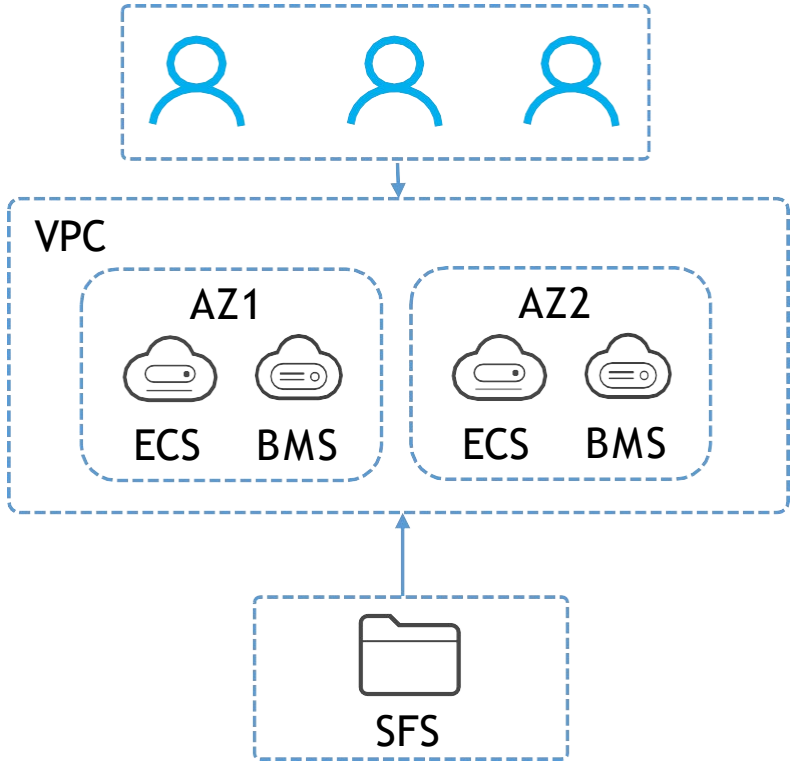

- Support for mainstream NFS and CIFS protocols
- Multi-instance shared storage
- Automatic capacity scaling
- Linear performance increase
- Authorization-based security isolation

Storage Overview: Block Storage VS. File Storage VS. Object Storage

1. **Block storage**: It maps the whole raw disk capacity to a host. **Typical use cases: disk arrays and hard drives** Block storage provides fast read and write, but cannot be used for sharing.
2. **File storage**: It is used for file sharing in LANs. **Typical use cases: FTP servers and NFS servers**. File storage addresses the problem where sharing is impossible on block storage. **Disadvantages**: The read/write latency is high. The client requires persistent connections, which is unfriendly to WAN sharing. There is a limit on the number of files that can be stored in a single file system, due to the tree structure.
3. **Object storage**: It provides fast storage for large amounts of data. **Typical use cases: distributed servers with built-in large-capacity hard drives** Object storage fixes the slow read/write problem in file storage and makes data sharing possible and easy. Its short connection mechanism delivers better sharing and security and its flat structure is good for storing massive amounts of data. **Disadvantages**: Object storage supports storage, fetch, and deletion actions, but does not support modification or write. It is mainly used for cloud drives, storage of massive videos and images, backup and archive, and website caches. The HTTP protocol and APIs (such as REST, SOAP, and S3) are usually used by object storage to provide services to hosts.

Q: Why do we still need block storage or file storage, even if object storage has the advantages of both block storage and file storage?

A: Here are the possible reasons:

- Some applications, like **databases**, require direct raw disk mapping, and databases need a low latency and can ensure data consistency for multi-node access. For this reason, block storage is more suitable for such applications.
- File storage is recommended if there are data sharing needs within a data center and there are file modification requirements, or if it is hard to change applications from file protocols to object protocols (to use object storage, legacy file storage must be reconstructed). Object storage is good for WAN connections (such as web drives) and data centers where data is written once, read many but no modifications are needed, and applications can be reconstructed.

Storage Type	Application Scenario	Comparison
EVS	For file systems, databases, or other system software and applications that require block storage	• Similar to using traditional disks on servers, you can format EVS disks that are attached to cloud servers and create file systems on the EVS disks. • A shared EVS disk can be attached to multiple ECSs for data sharing. • Data must be accessed over an internal network of the data center.
SFS	For video clouds, to handle massive amounts of data of bandwidth-intensive applications	• SFS complies with standard file protocols. It allows users to mount file systems to servers, so that users can use these file systems the same way as they would use local directories. • Data sharing is supported. One file system can be mounted to multiple servers for data sharing. • Data must be accessed over an internal network of the data center.
OBS	For storage of unstructured data such as documents, images, and audiovisual content	• Users have to use programming or third-party tools to access OBS. • Data sharing is supported. All users can invoke the same path to access shared objects in OBS from servers, embedded devices, and IoT devices. • Data stored in OBS can be accessed over the Internet.

An Example Architecture

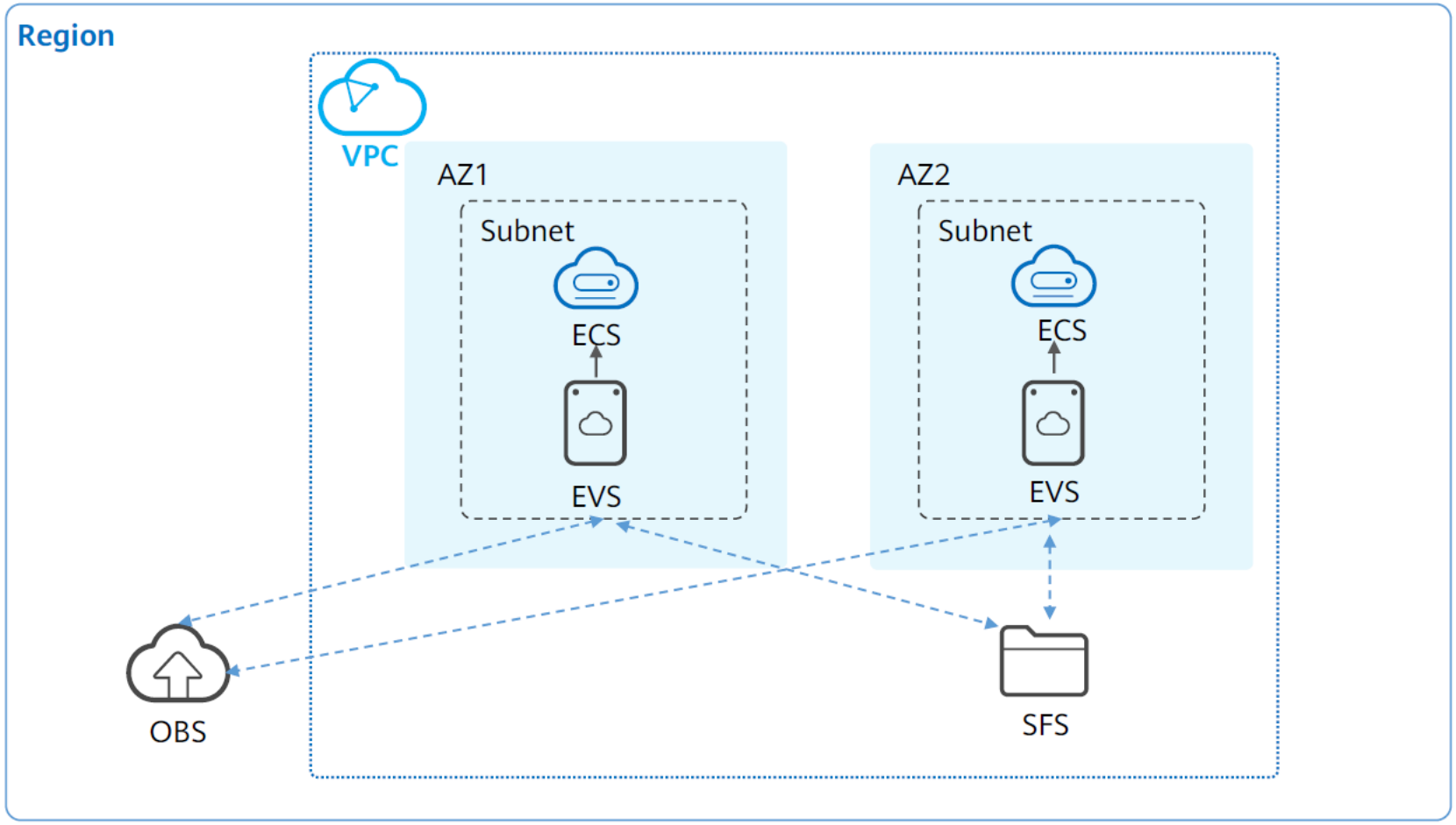

HUAWEI

Key Points

Typical storage networking types: DAS, NAS, IP SAN, and FC SAN

Storage types (by scenario): block storage, file storage, and object storage. Block storage falls into centralized SAN storage and distributed block storage.

Commonly used cloud storage services: EVS, OBS, and SFS

EVS block storage includes centralized SAN storage and distributed block storage. SAN storage includes IP SAN and FC SAN. ECS supports both IP SAN and FC SAN, while BMS supports only FC SAN. EVS based on the FusionStorage distributed block storage is available to both ECS and BMS.

SFS is underpinned by OceanStor 9000 NAS.

OBS is underpinned by FusionStorage OBS 2.0/3.0. OBS 3.0 is now the recommendation.

Network transport protocols used by ECSs and BMSs to access cloud storage:

For EVS: iSCSI for IP SAN, SCSI for FC SAN, and SCSI for the VBS client of FusionStorage distributed block storage

For SFS: NFS (for Linux) and CIFS (for Windows)

For OBS: HTTPS

Main storage reliability techniques: multipathing, bad sector repair, and disk copy

Main techniques for storage performance improvement: SSD cache and cache partitioning

Main techniques for storage efficiency improvement: deduplication, data compression, QoS, thin provisioning, and auto storage tiering

Main techniques for data storage protection: snapshots, LUN copy, clones, and remote replication

Thank you.

Bring digital to every person, home and organization for a fully connected, intelligent world.

Copyright © 2023 Huawei Technologies Co., Ltd.
All Rights Reserved.

The information in this document may contain predictive statements including, without limitation, statements regarding the future financial and operating results, future product portfolio, new technology, etc. There are a number of factors that could cause actual results and developments to differ materially from those expressed or implied in the predictive statements. Therefore, such information is provided for reference purpose only and constitutes neither an offer nor an acceptance. Huawei may change the information at any time without notice.

HUAWEI

HUAWEI